Orientalmotor

Rack and Pinion System

L Series

αSTEP AZ Series Equipped

The Rack and Pinion System **L** Series Simplifies Compact, High-Power Linear Motion.

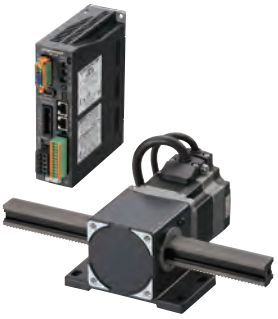

The **L** Series is a linear actuator in which a rack and pinion mechanism and a motor have been combined.
The motor is equipped with the αSTEP **AZ** Series that utilizes a battery-free absolute sensor, which allows for high positioning accuracy and high-load transportation up to 100 kg.

Easy to Use Linear Motion Mechanism that is “Compact” and “High Strength”

The Rack and Pinion System can easily convert the motor’s rotation to linear motion.
The linear motion mechanism has a compact design but it can transport large loads due to its high-strength fabrication.

Structure of Rack Vertical Travel

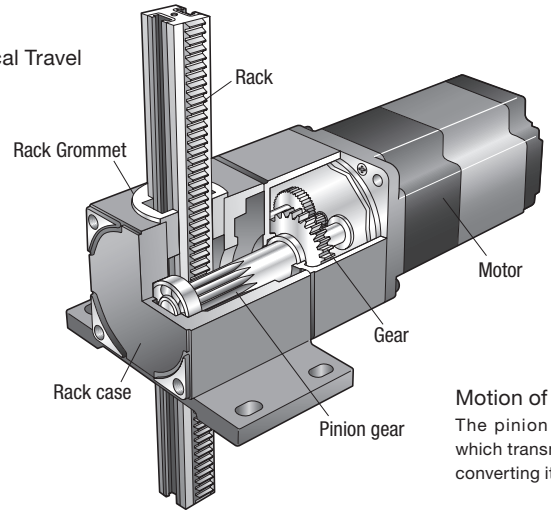

Motion of Rack and Pinion Systems
The pinion shaft motor engages the gear (decelerator), which transmits the movement of the pinion gear to the rack, converting it to linear motion.

Vertical Operation Can Handle a Max. Transportable Load of 100 kg and a Max. Stroke of 1000 mm

A variety of transportable mass and stroke are available to match your equipment.

Frame Size [mm]	Transportable Mass		Stroke [mm] 100 200 300 400 500 600 700 800 900 1000
60	Maximum	30 kg	● ● ● ● ● ● ● ●
80	Maximum	100 kg	● ● ● ● ● ● ● ● ● ●

Handles high load and long strokes

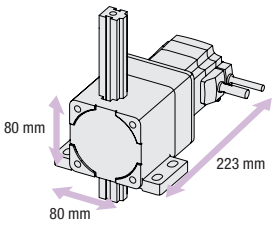

Its compact size can transport up to 100 kg (with electromagnetic brake)

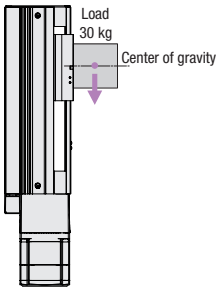

(with an electric linear slide with ball screw mechanism)

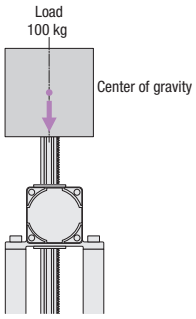

(with Rack and Pinion Systems)
If it is installed without having to consider external guides for moment loads, the transportable mass can be transported as is.

Space Saving

The body is able to move automatically by fixing the screw holes on both ends of the rack. It is effective in large equipment in which motor space is limited.

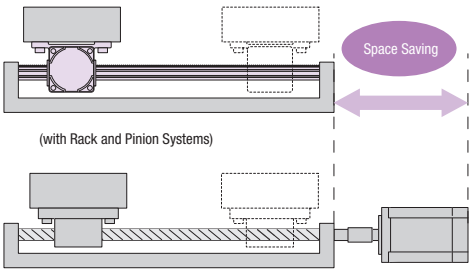

(with Rack and Pinion Systems)

(with ball screw mechanism)

Shorter Time Between Design to Start-up

The Rack and Pinion System can reduce the number of parts used, and it can also significantly reduce the time spent on design and assembly.

If Parts are Purchased Separately

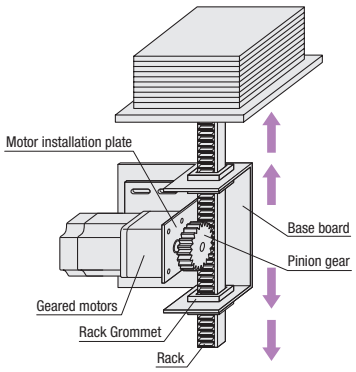

With Rack and Pinion Systems

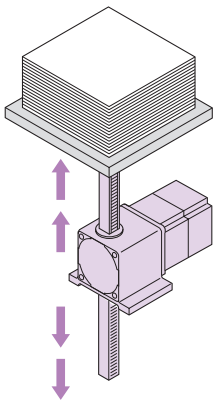

Setting in Millimeter Increments

The drive motor is equipped with the αSTEP **AZ** Series hybrid control system. By combining with the **MEXE02*** support software, the linear motion can be easily set in millimeter increments, which allows for various linear motion applications.

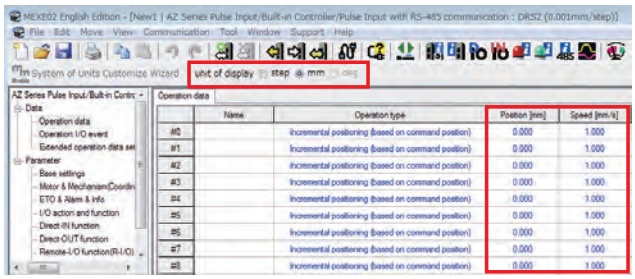

[Minimum Travel Amount]
High-speed type 0.01 mm
High transportable mass type 0.001 mm

[Permissible Speed Range]
0 - 500 mm/s (High-speed type)
0 - 90 mm/s (High transportable mass type, frame size 60 mm)
0 - 40 mm/s (High transportable mass type, frame size 80 mm)

*The **MEXE02** support software can be downloaded from the Oriental Motor website.

What is Hybrid Control System αSTEP?

αSTEP is a stepper motor-based motor that can perform independent control in which the advantages of "closed loop control" and "open loop control" are combined. It can constantly monitor the motor's position, and it automatically switches between the two control system in response to the situation. It is usually driven in synchronization with the command using open loop control, which enhances its high-response capability. In an overload situation, it corrects the motor's position using closed loop control to continue operation. It is a motor that is easy to use and is also reliable.

Applications

The Rack and Pinion Systems have many applications and they are easy to use.

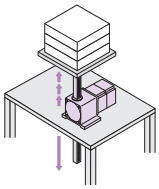

They make vertical operation easy. Types with an electro-magnetic brake are also available for vertical loads.

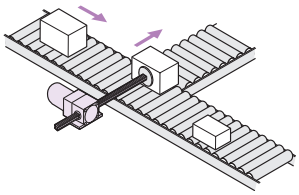

The high thrust force also makes push-and-pull operations easy.

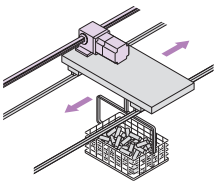

A wide variety of strokes and speeds are available.

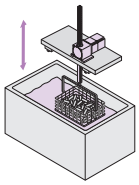

Using the screw holes on both ends of the rack can simplify bolting loads and securing the rack.

Please see the separate catalog for the αSTEP **AZ** Series product line-up.
To select a product, refer to the separate catalog, or see our website.

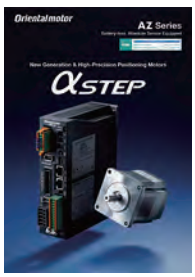

Easy Home Setting and Return-to-Home with an Absolute System Equipped with the αSTEP AZ Series Hybrid Control System

A compact mechanical multi-turn absolute sensor (patented) has been developed. This can help improve productivity and reduce costs.

αSTEP AZ Series
Equipped with Battery-free Absolute Sensor

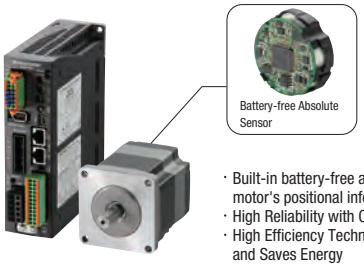

- Built-in battery-free absolute sensor constantly monitors the motor's positional information without an external sensor.
- High Reliability with Closed Loop Control
- High Efficiency Technology Reduces Motor Heat Generation and Saves Energy

No Home Sensor Required

Because it is an absolute system, no home sensor is required.

High-Speed Return-to-Home Operation

Because return-to-home is possible without using a home sensor, return-to-home can be performed at high speed without taking the specifications for sensor sensitivity into account, allowing for a shortened machine cycle.

Reduced Cost

Sensor and wiring costs can be reduced, allowing for lower system costs.

Simple Wiring

Wiring is simplified, and the degree of freedom for equipment design is increased.

Not Affected by Sensor Malfunctions

No need to worry about sensor malfunctions, sensor damage or sensor disconnection.

Improved Return-to-Home Accuracy

Home position accuracy is increased because the return-to-home action is performed regardless of any variations in home sensor sensitivity.

*If no limit sensor is installed, movements that exceed the limit values can be avoided through the use of the limits in the driver software.

Easy Home Position Setting

The home position can be easily set by pressing a switch on the front of the driver, which is saved by the absolute sensor. In addition, home setting is possible with the **MEXE02** support software or by using an external input signal.

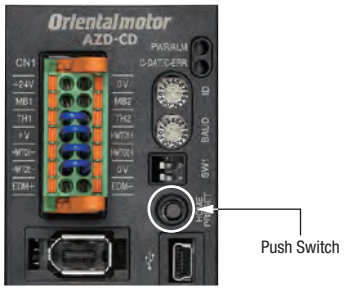

Return-to-Home Not Required

(Built-in controller type)

If the power shuts down during a positioning operation, the positioning information is retained. Furthermore, for built-in controller types, positioning operations can restart without a return-to-home when recovering from an emergency stop or a loss of power scenario.

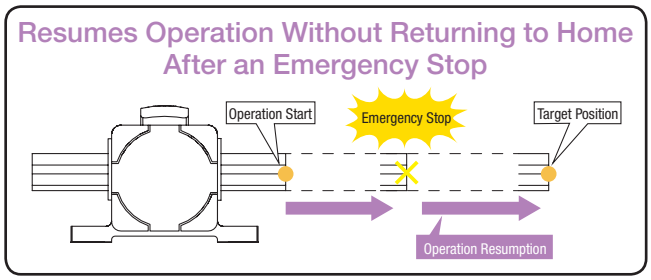

Battery-Free

No battery is required because it is a mechanical-type sensor. Because positioning information is managed mechanically by the absolute sensor, the positioning information can be preserved, even if the power turns off, or if the cable between the motor and the driver are disconnected.*

Reduced Maintenance

Because there's no battery that needs replacing, maintenance time and costs can be reduced.

Unlimited Driver Installation Possibilities

Because there is no need to secure space for battery replacement, there are no restrictions on the installation location of the driver, improving the flexibility and freedom of the layout design of the control box.

Safe for Overseas Shipping

With normal batteries that self-discharge, care must be taken when the equipment requires a long shipping time, such as when being sent overseas. The absolute sensor does not require a battery, so there is no limit to how long the positioning information is maintained. In addition, there's no need to worry about various safety regulations, which must be taken into consideration when shipping a battery overseas.

Position Holding Even When the Cable Between the Motor and Driver is Detached*

Positioning information is stored within the absolute sensor.

*Please note, the motor cabe must not be disconnected from the driver when the unit is live. Otherwise damage may occur.

The sequence function simplifies programs

(Available only on the built-in position function type)

By importing output signals for controlling other equipment or external input signals such as those from sensors, the **AZ** Series type can simplify sequence control programs.

- Number of positioning operation data items that can be set (up to 256 points)
- Number of general-purpose I/O points (9 points for input and 6 points for output)
- Number of communication I/O points (16 points for input and 16 points for output)

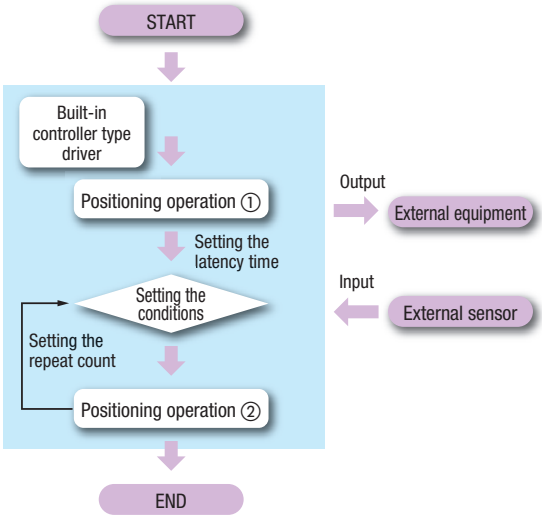

Examples of Loop Function-Assisted Operation

A loop function is a function in which the operation of the linked operation data number is repeated according to the set number of times.

Rack and Pinion Motor Product Name: **LM2F500AZMC-2**
Driver Product Name: **AZD-AD**
Application: Hoisting buckets

Operating Condition: Return to home after repeating 60 mm travel and 0.5 second stop three times.
Would like a simple method without using PLC.

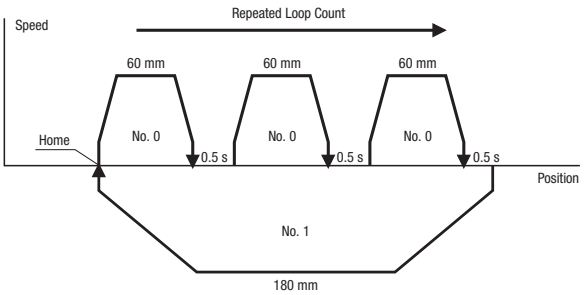

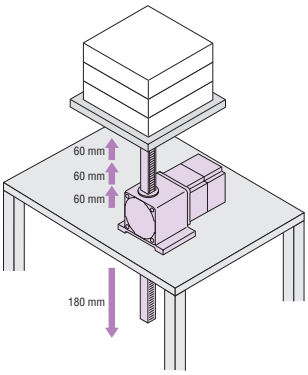

Example of **MEXE02** Support Software Setting

Speed and travel amount are set as "Operating Data".

- Operating Data

	Name	Operation type	Position [mm]	Speed [mm/s]	Acc	rrent [%]	Drive-complete delay time [s]	Link	Ne	th	Loop count	Loop offset	Loop end No.
#0		Incremental positioning (based on command position)	60.00	60.00		0	0.500	Automatic Sequential			loop 3{	0.00	}L-End
#1		Absolute positioning	0.00	60.00		0	0.000	No link			-	0.00	-

Traveling Amount Setting
Stop Time Setting
Repetition Count Setting

Available Drivers to suit a variety of host systems

Built-in Controller Type FLEX

Set the operating data in the driver, and the operating data is selected and executed from the host system. Host system connection and control is performed through I/O, Modbus (RTU), RS-485 communication, or FA network. The use of a network converter (sold separately) allows control via CC-Link communication, MECHATROLINK communication, or EtherCAT communication.

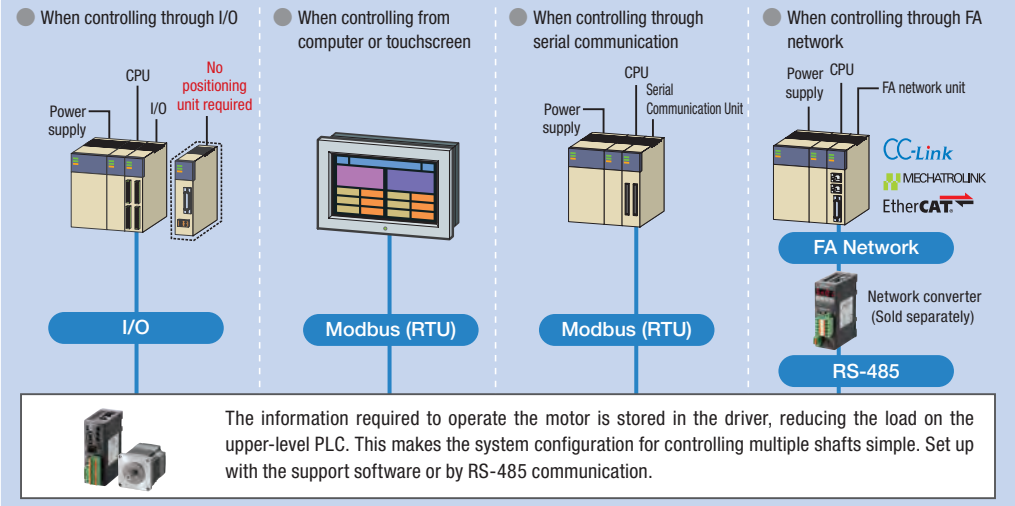

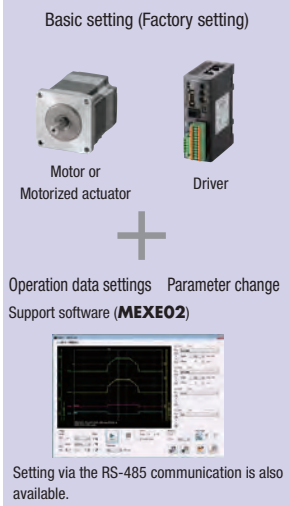

FLEX FLEX is a general term of the products that support I/O control, Modbus (RTU) control, and FA network control via a network converter.

Pulse Input Type with RS-485 Communication

This type executes operation by inputting pulses to the driver. The motor is controlled from the positioning unit (pulse generator) provided by the customer. The use of RS-485 communication allows the monitoring of status information (position, speed, torque, alarms, temperature, etc.) of the motor.

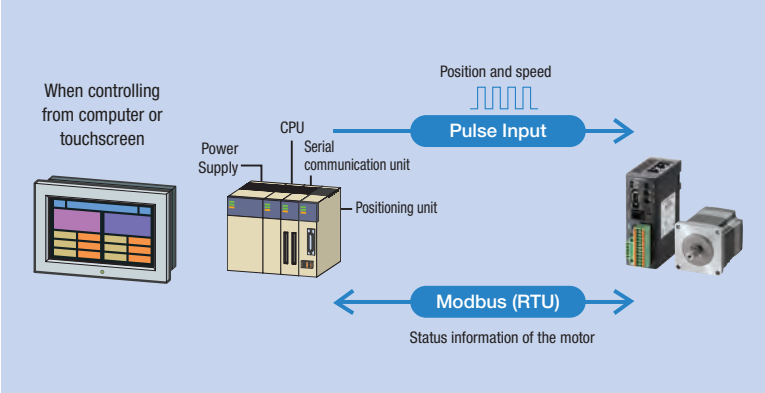

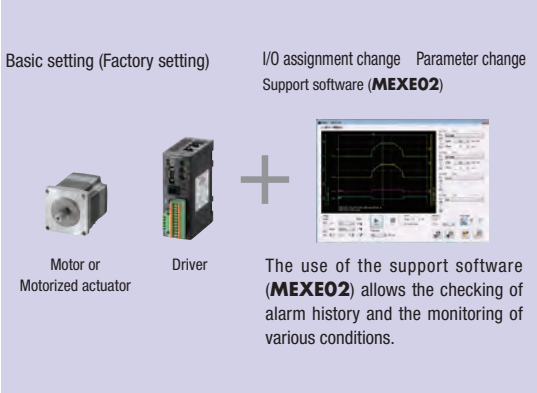

Pulse Input Type

This type executes operation by inputting pulses to the driver. The motor is controlled from the positioning unit (pulse generator) provided by the customer. The use of the support software (**MEXE02**) allows the checking of alarm history and the monitoring of various conditions.

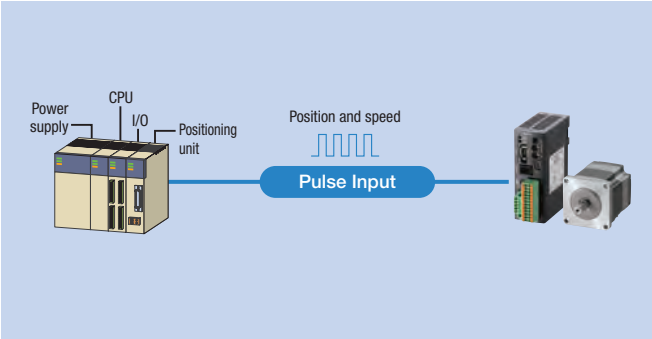

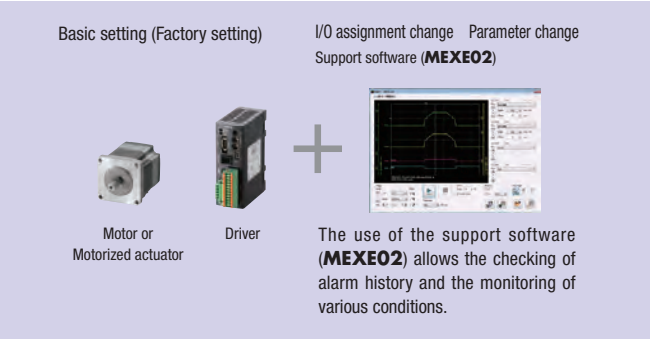

- CC-Link and MECHATROLINK are the registered trademarks of the CC-Link Partner Association and the MECHATROLINK Members Association, respectively.
- EtherCAT is the registered trademark licensed by Beckhoff Automation in Germany.
- The support software (**MEXE02**) can be downloaded from the Oriental Motor website. The media is also available (for free).

Simple Operation with Support Software

The support software enables data setting and verification of the actual drive by using a computer.

Support Software (MEXE02)

The support software can be downloaded from the website.

● Operating Data and Parameter Settings

Setting of operation data and parameters is easily performed via computer. Because the setting data can be saved, when the driver is replaced, the same settings can be used by downloading the saved data to the new driver.

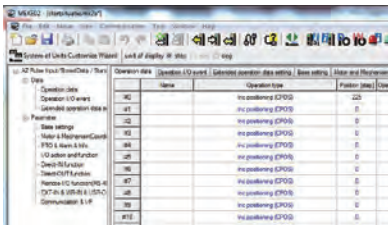

● Teaching and Remote Operation

By using the data setting software and manual positioning, the operation command information can be downloaded to the driver. Use when setting up equipment.

● Multi-monitoring enables remote operation and teaching while monitoring.

Various Monitoring Functions

● I/O Monitoring

The status of I/O wiring to the driver can be verified by computer. This can be used for post-wiring I/O checks or I/O checks during operation.

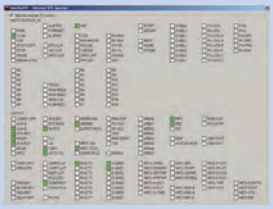

● Waveform Monitoring

The operational state of the motor (such as command speed and motor load factor), can be checked by an oscilloscope-like image. This can be used for equipment start-up and adjustment.

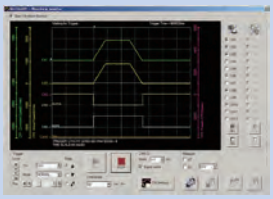

● Alarm Monitoring

When an abnormality occurs, the details of the abnormality and the solution can be checked.

Product Line

Rack and Pinion Motor

Frame Size [mm]	Type	Electromagnetic Brake	Travel Direction of Rack		Transportable Mass [kg]	Permissible Speed Range [mm/s]	Stroke [mm]
			Horizontal (**B** type)	Vertical (**F** type)			
60	High-Speed Type	None/ Equipped	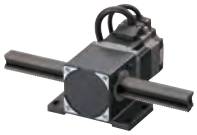		7	0 - 500	100 - 800
					10	0 - 250	
	High Transportable Mass Type				30	0 - 90	
80	High-Speed Type				7	0 - 500	100 - 1000
					20	0 - 250	
	High Transportable Mass Type				70	0 - 40	
					100	0 - 20	

Driver

Type
Built-in Controller FLEX  Single-Phase/ Three-Phase 200-240 VAC
Pulse Input with RS-485 Communication  Single-Phase/ Three-Phase 200-240 VAC
Pulse Input  Single-Phase/ Three-Phase 200-240 VAC

How to Read Specifications Table

Specifications

	Frame Size			60 mm	80 mm
	Actuator Product Name	Standard		**LM2□500AZAC-■**	**LM4□500AZAC-■**
		with Electromagnetic Brake		**LM2□500AZMC-■**	**LM4□500AZMC-■**
	Driver Product Name	Built-in Controller Type		**AZD-CD** (Single-Phase/Three-Phase 200-240 VAC)	
		Pulse Input Type with RS-485 Communication		**AZD-CX** (Single-Phase/Three-Phase 200-240 VAC)	
		Pulse Input Type		**AZD-C** (Single-Phase/Three-Phase 200-240 VAC)	
	Equipped Motor (**AZ** Series)			**AZM66**	
①	Maximum Speed		mm/s	500	
②	Transportable Mass		kg	10 (250 mm/s) 7 (500 mm/s)	20 (250 mm/s) 7 (500 mm/s)
③	Maximum Acceleration		m/s^2	1	
④	Thrust*1		N	110 (250 mm/s) 77 (500 mm/s)	220 (250 mm/s) 77 (500 mm/s)
⑤	Push Force		N	110	220
⑥	Holding Force	Power On	N	110	220
		with Electromagnetic Brake	N	110	220
⑦	Minimum Travel Amount		mm	0.01	
⑧	Rotor Inertia		J: kgm^2	370×10^{-7} (530×10^{-7})*2	
⑨	Stroke		mm	100, 200, 300, 400, 500, 600, 700, or 800	100, 200, 300, 400, 500, 600, 700, 800, 900, or 1000
	Power Supply Input	Voltage and Frequency		Single-Phase/Three-Phase 200-240 VAC −15 to +6% 50/60 Hz	
		Input Current A	Single-Phase 100-120 VAC	3.8	
			Single-Phase 200-240 VAC	2.3	
			Three-Phase 200-240 VAC	1.4	
	Control Power Supply			24 VDC±5%*3 0.25 A (0.5 A)*2	

- Either **F** (vertical to the mounting foot surface) or **B** (horizontal to the mounting foot surface) indicating the rack moving direction is entered where the box □ is located within the product name. A number indicating the rack stroke is entered where the box ■ is located within the product name.
- When the rack is moved in a vertical direction, the load mass that can be driven is the value obtained by subtracting the rack mass from the transportable mass. Refer to 'Dimensions' for the rack mass.

*1 For a value obtained by adding the acceleration thrust of a load to the load thrust, do not exceed the thrust amount.
*2 The bracket ( ) indicates the value for the product with an electromagnetic brake.
*3 For the type with an electromagnetic brake, a 24 VDC ±4 % specification applies if the wiring distance between the motor and the driver is extended to 20 m using a cable.

- Depending on the product, limitations and caution may be required for usage. For details, refer to the notes on each product page.

① Maximum Speed: Maximum speed allowed when transporting the transportable mass.
② Transportable Mass: Mass that can be moved under operating performance of the rack and pinion motor.
③ Maximum Acceleration: The maximum acceleration allowed when the transportable mass is transferred.
④ Thrust: Force from the rack that pushes the load when speed is constant.
⑤ Push Force: The pressure applied to the load during the pushing operation.
⑥ Holding Force: Holding force when the motor is stopped or when the electromagnetic brake is operating, while power is supplied.
⑦ Minimum Travel Amount: The minimum distant that the rack travels. (Factory setting)
⑧ Rotor Inertia: This refers to the inertia of the rotor inside the motor.
⑨ Stroke: The maximum distance the rack can be pushed and pulled.

System Configuration

●Combination of L Series with Electromagnetic Brake and either Built-in Controller Type Driver or Pulse Input Type Driver with RS-485 Communication

This is an example of a configuration using I/O control or RS-485 communication in a built-in controller type driver.
Rack and pinion motors, drivers, and connection cable sets/flexible connection cable sets need to be ordered separately.

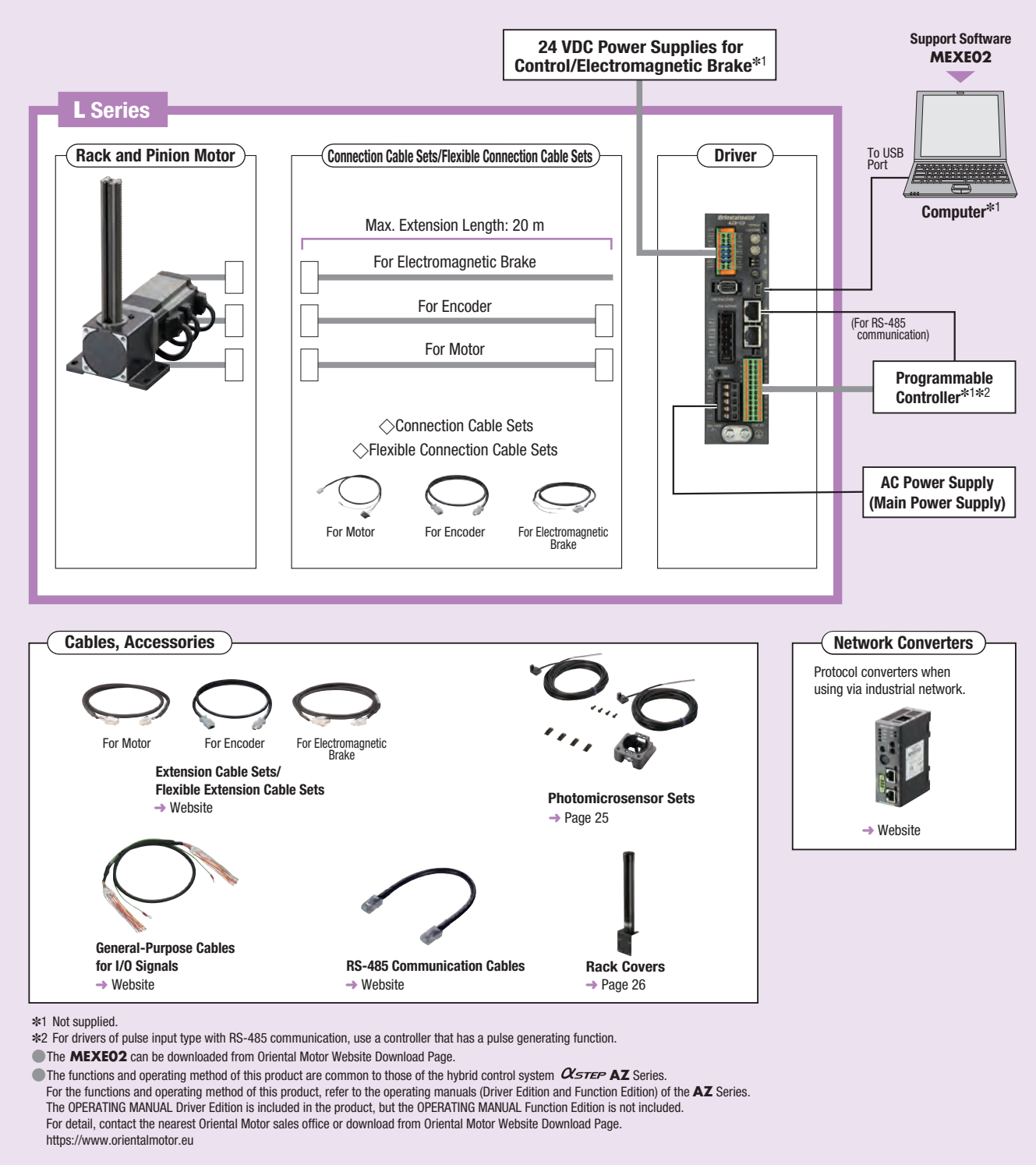

*1 Not supplied.
*2 For drivers of pulse input type with RS-485 communication, use a controller that has a pulse generating function.
● The **MEXE02** can be downloaded from Oriental Motor Website Download Page.
● The functions and operating method of this product are common to those of the hybrid control system αSTEP **AZ** Series.
For the functions and operating method of this product, refer to the operating manuals (Driver Edition and Function Edition) of the **AZ** Series.
The OPERATING MANUAL Driver Edition is included in the product, but the OPERATING MANUAL Function Edition is not included.
For detail, contact the nearest Oriental Motor sales office or download from Oriental Motor Website Download Page.
https://www.orientalmotor.eu

●Example of System Configuration

Rack and Pinion Motor	+	Driver	+	Connection Cable Set
LM2B90AZMC-1		**AZD-CD**		**CC030VZFB**

● The system configuration shown above is an example. Other combinations are also available.

Note
● The motor cable and electromagnetic brake cable from the motor cannot be connected directly to the driver. When connecting to a driver, use a connection cable.

●Combination of L Series with Electromagnetic Brake and Pulse Input Type Driver

This is an example of a single-axis system configuration using a programmable controller (with pulse generating function).
Rack and pinion motors, drivers, and connection cable sets/flexible connection cable sets need to be ordered separately.

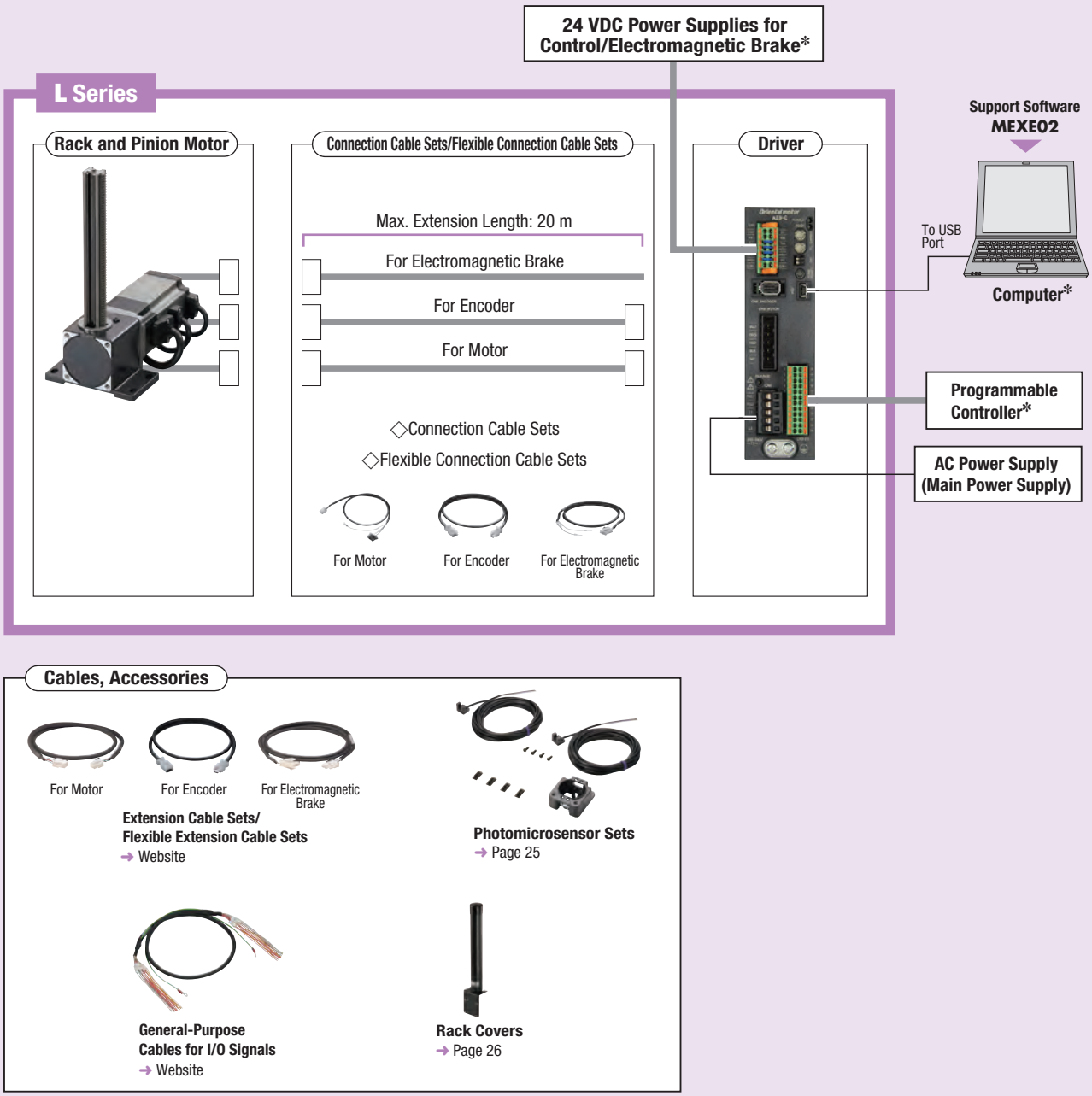

* Not supplied.
- The **MEXE02** can be downloaded from Oriental Motor Website Download Page.
- The functions and operating method of this product are common to those of the hybrid control system αSTEP **AZ** Series.
  For the functions and operating method of this product, refer to the operating manuals (Driver Edition and Function Edition) of the **AZ** Series.
  The OPERATING MANUAL Driver Edition is included in the product, but the OPERATING MANUAL Function Edition is not included.
  For detail, contact the nearest Oriental Motor sales office or download from Oriental Motor Website Download Page.
  https://www.orientalmotor.eu

●Example of System Configuration

Rack and Pinion Motor	+	Driver	+	Connection Cable Set
LM2B90AZMC-1		**AZD-C**		**CC030VZFB**

- The system configuration shown above is an example. Other combinations are also available.

Note
- The motor cable and electromagnetic brake cable from the motor cannot be connected directly to the driver. When connecting to a driver, use a connection cable.

Product Number Code

Rack and Pinion Motors

LM 4 F 500 AZ M C - 1

① ② ③ ④ ⑤ ⑥ ⑦ ⑧

①	Series Name	**LM**: **L** Series Rack and Pinion Motor
②	Frame Size	**2**: 60 mm **4**: 80 mm
③	Moving Direction of Rack	**F**: Vertical to Mounting Foot Surface **B**: Horizontal to Mounting Foot Surface
④	Rack Maximum Speed	**40**: 40 mm/s **90**: 90 mm/s **500**: 500 mm/s
⑤	Equipped Motor	**AZ**: **AZ** Series
⑥	Motor Shaft Features	**A**: Standard **M**: with Electromagnetic Brake
⑦	Motor Specifications	**C**: AC Power Supply Input Specifications
⑧	Stroke	**1**: 100 mm **2**: 200 mm **3**: 300 mm **4**: 400 mm **5**: 500 mm **6**: 600 mm **7**: 700 mm **8**: 800 mm **9**: 900 mm **10**: 1000 mm

Drivers

AZD - C D

① ② ③

①	Driver Type	**AZD**: **AZ** Series Driver
②	Power Supply Input	**A**: Single-Phase 100-120 VAC **C**: Single-Phase/Three-Phase 200-240 VAC
③	Type	**D**: Built-in Controller Type **X**: Pulse Input Type with RS-485 Communication Blank: Pulse Input Type

Connection Cable Sets/Flexible Connection Cable Sets

CC 050 V Z F B

① ② ③ ④ ⑤ ⑥

①		**CC**: Cable
②	Length	**005**: 0.5 m **010**: 1 m **015**: 1.5 m **020**: 2 m **025**: 2.5 m **030**: 3 m **040**: 4 m **050**: 5 m **070**: 7 m **100**: 10 m **150**: 15 m **200**: 20 m
③	Reference Number	
④	Applicable Model	**Z**: **AZ** Series
⑤	Cable Type	**F**: Connection Cable Set **R**: Flexible Connection Cable Set
⑥	Electromagnetic Brake	Blank: without Electromagnetic Brake **B**: with Electromagnetic Brake

Product Line

●Rack and Pinion Motors

◇High-Speed Type

Frame Size [mm]	Product Name
60	LM2□500AZAC-1
	LM2□500AZAC-2
	LM2□500AZAC-3
	LM2□500AZAC-4
	LM2□500AZAC-5
	LM2□500AZAC-6
	LM2□500AZAC-7
	LM2□500AZAC-8
80	LM4□500AZAC-1
	LM4□500AZAC-2
	LM4□500AZAC-3
	LM4□500AZAC-4
	LM4□500AZAC-5
	LM4□500AZAC-6
	LM4□500AZAC-7
	LM4□500AZAC-8
	LM4□500AZAC-9
	LM4□500AZAC-10

●Either **F** (vertical to the mounting foot surface) or **B** (horizontal to the mounting foot surface) indicating the rack moving direction is entered where the box □ is located within the product name.

◇High-Speed Type with Electromagnetic Brake

Frame Size [mm]	Product Name
60	LM2□500AZMC-1
	LM2□500AZMC-2
	LM2□500AZMC-3
	LM2□500AZMC-4
	LM2□500AZMC-5
	LM2□500AZMC-6
	LM2□500AZMC-7
	LM2□500AZMC-8
80	LM4□500AZMC-1
	LM4□500AZMC-2
	LM4□500AZMC-3
	LM4□500AZMC-4
	LM4□500AZMC-5
	LM4□500AZMC-6
	LM4□500AZMC-7
	LM4□500AZMC-8
	LM4□500AZMC-9
	LM4□500AZMC-10

●Either **F** (vertical to the mounting foot surface) or **B** (horizontal to the mounting foot surface) indicating the rack moving direction is entered where the box □ is located within the product name.

◇High-Transportable-Mass Type

Frame Size [mm]	Product Name
60	LM2□90AZAC-1
	LM2□90AZAC-2
	LM2□90AZAC-3
	LM2□90AZAC-4
	LM2□90AZAC-5
	LM2□90AZAC-6
	LM2□90AZAC-7
	LM2□90AZAC-8
80	LM4□40AZAC-1
	LM4□40AZAC-2
	LM4□40AZAC-3
	LM4□40AZAC-4
	LM4□40AZAC-5
	LM4□40AZAC-6
	LM4□40AZAC-7
	LM4□40AZAC-8
	LM4□40AZAC-9
	LM4□40AZAC-10

●Either **F** (vertical to the mounting foot surface) or **B** (horizontal to the mounting foot surface) indicating the rack moving direction is entered where the box □ is located within the product name.

◇High-Transportable-Mass Type with Electromagnetic Brake

Frame Size [mm]	Product Name
60	LM2□90AZMC-1
	LM2□90AZMC-2
	LM2□90AZMC-3
	LM2□90AZMC-4
	LM2□90AZMC-5
	LM2□90AZMC-6
	LM2□90AZMC-7
	LM2□90AZMC-8
80	LM4□40AZMC-1
	LM4□40AZMC-2
	LM4□40AZMC-3
	LM4□40AZMC-4
	LM4□40AZMC-5
	LM4□40AZMC-6
	LM4□40AZMC-7
	LM4□40AZMC-8
	LM4□40AZMC-9
	LM4□40AZMC-10

●Either **F** (vertical to the mounting foot surface) or **B** (horizontal to the mounting foot surface) indicating the rack moving direction is entered where the box □ is located within the product name.

●Drivers

◇Built-in Controller Type

Power Supply Input	Product Name
Single-Phase/Three-Phase 200-240 VAC	**AZD-CD**

◇Pulse Input Type

Power Supply Input	Product Name
Single-Phase/Three-Phase 200-240 VAC	**AZD-C**

◇Pulse Input Type with RS-485 Communication

Power Supply Input	Product Name
Single-Phase/Three-Phase 200-240 VAC	**AZD-CX**

●Connection Cable Sets/Flexible Connection Cable Sets

Use a flexible connection cable set if the cable will be bent.

The motor cable and electromagnetic brake cable from the motor cannot be connected directly to the driver.
When connecting to a driver, use a connection cable.

◇For Motor/Encoder

For Motor For Encoder

Product Line	Length L [m]	Product Name
Connection Cable Sets	0.5	**CC005VZF**
	1	**CC010VZF**
	1.5	**CC015VZF**
	2	**CC020VZF**
	2.5	**CC025VZF**
	3	**CC030VZF**
	4	**CC040VZF**
	5	**CC050VZF**
	7	**CC070VZF**
	10	**CC100VZF**
	15	**CC150VZF**
	20	**CC200VZF**
Flexible Connection Cable Sets	0.5	**CC005VZR**
	1	**CC010VZR**
	1.5	**CC015VZR**
	2	**CC020VZR**
	2.5	**CC025VZR**
	3	**CC030VZR**
	4	**CC040VZR**
	5	**CC050VZR**
	7	**CC070VZR**
	10	**CC100VZR**
	15	**CC150VZR**
	20	**CC200VZR**

◇For Motor/Encoder/ Electromagnetic Brake

For Motor For Encoder For Electromagnetic Brake

Product Line	Length L [m]	Product Name
Connection Cable Sets	0.5	**CC005VZFB**
	1	**CC010VZFB**
	1.5	**CC015VZFB**
	2	**CC020VZFB**
	2.5	**CC025VZFB**
	3	**CC030VZFB**
	4	**CC040VZFB**
	5	**CC050VZFB**
	7	**CC070VZFB**
	10	**CC100VZFB**
	15	**CC150VZFB**
	20	**CC200VZFB**
Flexible Connection Cable Sets	0.5	**CC005VZRB**
	1	**CC010VZRB**
	1.5	**CC015VZRB**
	2	**CC020VZRB**
	2.5	**CC025VZRB**
	3	**CC030VZRB**
	4	**CC040VZRB**
	5	**CC050VZRB**
	7	**CC070VZRB**
	10	**CC100VZRB**
	15	**CC150VZRB**
	20	**CC200VZRB**

■Included

●Rack and Pinion Motors

Type \ Included	Operating Manual
Common to All Types	1 Copy

●Drivers

Type \ Included	Connector	Operating Manual
Common to All Types	・CN4 Connector (1 pc.) ・CN1 Connector (1 pc.) ・CN5 Connector (1 pc.) ・Connector Lever (1 pc.)	1 Copy

●Connection Cable Sets/Flexible Connection Cable Sets

Type \ Included	Operating Manual
Connection Cable Set	–
Flexible Connection Cable Set	1 Copy

Please see the separate catalog for the αSTEP **AZ** Series product line-up. To select a product, refer to the separate catalog, or see our website.

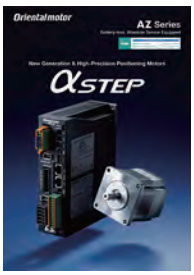

High-Speed Type

Specifications

Frame Size			60 mm	80 mm
Actuator Product Name	Standard		**LM2□500AZAC-■**	**LM4□500AZAC-■**
	with Electromagnetic Brake		**LM2□500AZMC-■**	**LM4□500AZMC-■**
Driver Product Name	Built-in Controller Type		**AZD-CD** (Single-Phase/Three-Phase 200-240 VAC)	
	Pulse Input Type with RS-485 Communication		**AZD-CX** (Single-Phase/Three-Phase 200-240 VAC)	
	Pulse Input Type		**AZD-C** (Single-Phase/Three-Phase 200-240 VAC)	
Equipped Motor (**AZ** Series)			**AZM66**	
Maximum Speed		mm/s	500	
Transportable Mass		kg	10 (250 mm/s) 7 (500 mm/s)	20 (250 mm/s) 7 (500 mm/s)
Maximum Acceleration		m/s^2	1	
Thrust*1		N	110 (250 mm/s) 77 (500 mm/s)	220 (250 mm/s) 77 (500 mm/s)
Push Force		N	110	220
Holding Force	Power On	N	110	220
	with Electromagnetic Brake	N	110	220
Minimum Travel Amount		mm	0.01	
Rotor Inertia		J: kgm^2	370×10^{-7} (530×10^{-7})*2	
Stroke		mm	100, 200, 300, 400, 500, 600, 700, or 800	100, 200, 300, 400, 500, 600, 700, 800, 900, or 1000
Power Supply Input	Voltage and Frequency		Single-Phase/Three-Phase 200-240 VAC −15 to +6% 50/60 Hz	
	Input Current A	Single-Phase 100-120 VAC	3.8	
		Single-Phase 200-240 VAC	2.3	
		Three-Phase 200-240 VAC	1.4	
Control Power Supply			24 VDC±5%*3 0.25 A (0.5 A)*2	

- Either **F** (vertical to the mounting foot surface) or **B** (horizontal to the mounting foot surface) indicating the rack moving direction is entered where the box □ is located within the product name. A number indicating the rack stroke is entered where the box ■ is located within the product name.
- When the rack is moved in a vertical direction, the load mass that can be driven is the value obtained by subtracting the rack mass from the transportable mass. Refer to 'Dimensions' for the rack mass.

*1 For a value obtained by adding the acceleration thrust of a load to the load thrust, do not exceed the thrust amount.
*2 The bracket ( ) indicates the value for the product with an electromagnetic brake.
*3 For the type with an electromagnetic brake, a 24 VDC±4% specification applies if the wiring distance between the motor and the driver is extended to 20 m using a cable.

Positioning Distance – Positioning Time

The positioning time (reference) can be checked from the positioning distance.
The positioning time differs depending on the transportable mass.

LM2

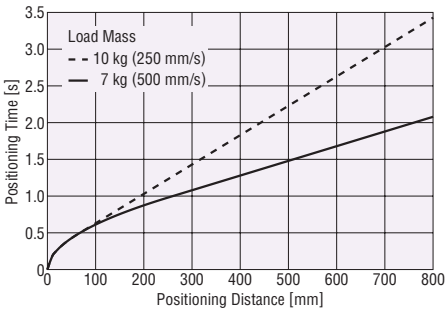

LM4

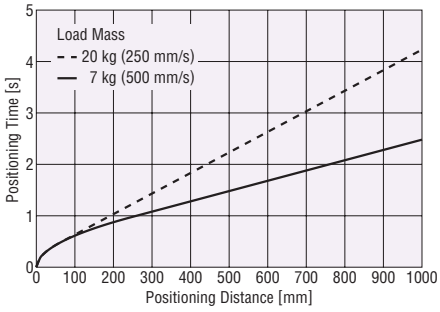

Repetitive Positioning Accuracy (Reference Value)

It is the value measured with the transportable mass. It varies depending on load, driving condition or mounting direction.

Product Name	Rack Moving Direction	Repetitive Positioning Accuracy [mm]
LM2	Horizontal Direction	±0.25
LM4		
LM2	Vertical Direction	±0.07
LM4		

Operating Speed – Transportable Mass

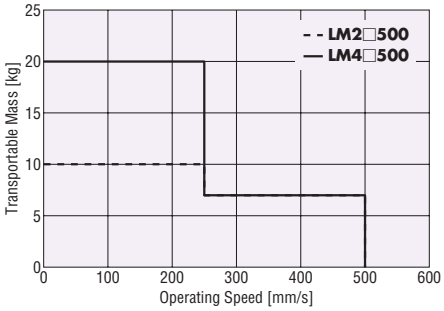

Notes

- The operating speed-transportable mass characteristics shows the data based on Oriental Motor's measurement conditions. If conditions change, the characteristics may change.
- Depending on the driving conditions, a considerable amount of heat may be generated by the motor. To protect the absolute sensor, ensure that the motor case temperature is 80 °C or less. (When conforming to UL Standards, it is required to keep the temperature of the motor case at 75 °C or less, since the motor is recognized as insulation class A.)

High-Transportable-Mass Type

Specifications

Frame Size			60 mm	80 mm
Actuator Product Name	Standard		**LM2□90AZAC-■**	**LM4□40AZAC-■**
	with Electromagnetic Brake		**LM2□90AZMC-■**	**LM4□40AZMC-■**
Driver Product Name	Built-in Controller Type		**AZD-CD** (Single-Phase/Three-Phase 200-240 VAC)	
	Pulse Input Type with RS-485 Communication		**AZD-CX** (Single-Phase/Three-Phase 200-240 VAC)	
	Pulse Input Type		**AZD-C** (Single-Phase/Three-Phase 200-240 VAC)	
Equipped Motor (**AZ** Series)			**AZM66**	
Maximum Speed		mm/s	90	40
Transportable Mass		kg	30	100 (20 mm/s) 70 (40 mm/s)
Maximum Acceleration		m/s^2	0.187	0.074
Thrust*1		N	306	1008 (20 mm/s) 705 (40 mm/s)
Push Force		N	306	1008
Holding Force	Power On	N	306	1008
	with Electromagnetic Brake	N	306	1008
Minimum Travel Amount		mm	0.001	
Rotor Inertia		J: kgm^2	370×10-7 (530×10-7)*2	
Stroke		mm	100, 200, 300, 400, 500, 600, 700, or 800	100, 200, 300, 400, 500, 600, 700, 800, 900, or 1000
Power Supply Input	Voltage and Frequency		Single-Phase/Three-Phase 200-240 VAC −15 to +6% 50/60 Hz	
		Single-Phase 200-240 VAC	2.3	
		Three-Phase 200-240 VAC	1.4	
Control Power Supply			24 VDC±5%*3 0.25 A (0.5 A)*2	

- Either **F** (vertical to the mounting foot surface) or **B** (horizontal to the mounting foot surface) indicating the rack moving direction is entered where the box □ is located within the product name. A number indicating the rack stroke is entered where the box ■ is located within the product name.
- When the rack is moved in a vertical direction, the load mass that can be driven is the value obtained by subtracting the rack mass from the transportable mass. Refer to 'Dimensions' for the rack mass.

*1 For a value obtained by adding the acceleration thrust of a load to the load thrust, do not exceed the thrust amount.
*2 The bracket ( ) indicates the value for the product with an electromagnetic brake.
*3 For the type with an electromagnetic brake, a 24 VDC±4% specification applies if the wiring distance between the motor and the driver is extended to 20 m using a cable.

Positioning Distance – Positioning Time

The positioning time (reference) can be checked from the positioning distance.
The positioning time differs depending on the transportable mass.

LM2

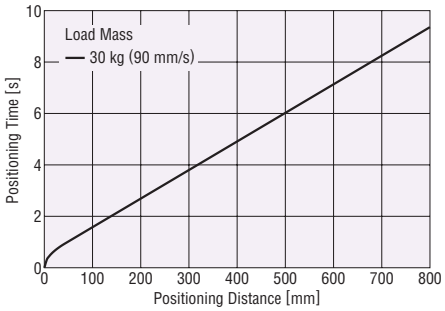

LM4

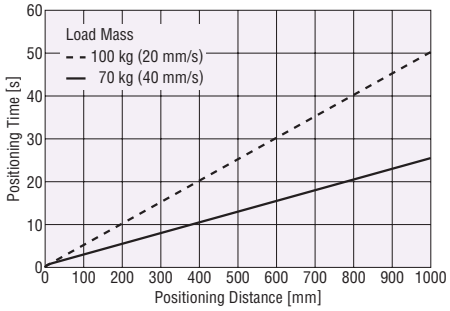

Repetitive Positioning Accuracy (Reference Value)

It is the measured value with transportable mass. It varies depending on load, driving condition or mounting direction.

Product Name	Rack Moving Direction	Repetitive Positioning Accuracy [mm]
LM2	Horizontal Direction	±0.25
LM4		
LM2	Vertical Direction	±0.07
LM4		

Operating Speed – Transportable Mass

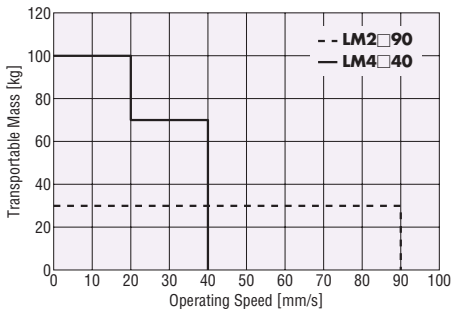

Notes

- The operating speed-transportable mass characteristics shows the data based on Oriental Motor's measurement conditions. If conditions change, the characteristics may change.
- Depending on the driving conditions, a considerable amount of heat may be generated by the motor. To protect the absolute sensor, ensure that the motor case temperature is 80˚C or less. (When conforming to the UL Standards, it is required to keep the temperature of the motor case at 75˚C or less, since the motor is recognized as insulation class A.)

Electromagnetic Brake Specifications

Product Name		LM2	LM4
Brake Type		Power Off Activated Type	
Power Supply Voltage		24 VDC±5%*	
Power Supply Current	A	0.25	
Brake Operating Time	ms	20	
Brake Releasing Time	ms	30	
Time Rating		Continuous	

*For the type with an electromagnetic brake, a 24 VDC±4% specification applies if the wiring distance between the motor and the driver is extended to 20 m using a cable.

General Specifications

		Rack and Pinion Motor	Driver	
			Built-in Controller Type Pulse Input Type with RS-485 Communication	Pulse Input Type
Thermal Class		130 (B) [UL Recognized 105 (A)]	–	
Insulation Resistance		100 MΩ or more when a 500 VDC megger is applied between the following places: · Case – Motor Windings · Case – Electromagnetic Brake Windings*2	100 MΩ or more when a 500 VDC megger is applied between the following places: · Protective Earth Terminal – Power Supply Terminal · Encoder Connector – Power Supply Terminal · I/O Signal Terminal – Power Supply Terminal	
Dielectric Strength		Sufficient to withstand the following for 1 minute: · Case – Motor Windings 1.5 kVAC, 50 Hz or 60 Hz · Case – Electromagnetic Brake Windings*2 1.5 kVAC, 50 Hz or 60 Hz	Sufficient to withstand the following for 1 minute: · Protective Earth Terminal – Power Supply Terminal 1.5 kVAC, 50 Hz or 60 Hz · Encoder Connector – Power Supply Terminal 1.8 kVAC, 50 Hz or 60 Hz · I/O Signal Terminal – Power Supply Terminal 1.8 kVAC, 50 Hz or 60 Hz	
Operating Environment	Ambient Temperature	0 to +40 °C (Non-freezing)*3	0 to +55 °C (Non-freezing)*4	
	Ambient Humidity	85% or less (Non-condensing)		
	Atmosphere	No corrosive gases or dust. The product should not be exposed to water, oil or other liquids.		
Degree of Protection		IP30 (Excluding rack moving part and connector part)	IP10	IP20
Rotation Detection Range in Power OFF State (Motor Output Shaft)		±900 Rotations (1800 Rotations)		

*1 The motor product name (not the actuator product name) is recognized by UL under the UL Standards.
The motor product name (not the actuator product name) conforms to the standards to affix the CE Marking.
*2 Only for products with an electromagnetic brake.
*3 It is based on Oriental Motor's measurement conditions.
*4 When installing a motor to a heat sink of a capacity at least equivalent to an aluminum plate, (200×200 mm), thickness 2 mm.

Note
- Disconnect the motor and driver when taking an insulation resistance measurement or performing a dielectric voltage withstand test.
- Also, do not perform these tests on the absolute sensor part of the motor.

Moving Direction

At the time of shipment, the moving direction of the rack is set as follows.

B Type

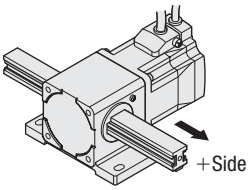

F Type

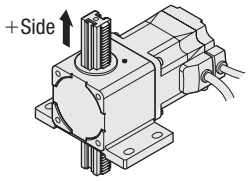

Please see the separate catalog for the αSTEP **AZ** Series product line-up. To select a product, refer to the separate catalog, or see our website.

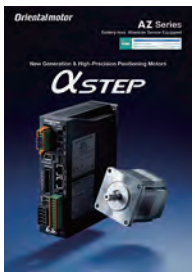

Rack Permissible Rotational Torque (Moment)

Product Name	Rack Permissible Rotational Torque (Moment)
LM2	0.3 Nm max.
LM4	0.5 Nm max.

● Keep the rotational torque below the permissible value.
If the rotational torque is applied too much, the rack bushing will wear in a short time.

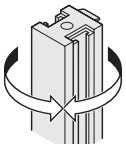

Permissible Radial Load

Stroke [mm]	**LM2□90**	**LM2□500**	**LM4□40**	**LM4□500**
100	25	25*1	120	60*1
200	20	20*1	90	40*1
300	10	10*1	70	30*1
400	10	10*1	60	25*1
500	7	7*1	50	20*1
600	*2	*2	40	15*1
700	*2	*2	40	10*1
800	*2	*2	25	7*1
900	–	–	20	*2
1000	–	–	15	*2

● Either **F** (vertical to the mounting foot surface) or **B** (horizontal to the mounting foot surface) indicating the rack moving direction is entered where the box □ is located within the product name.
*1 The value is the operation speed up to 90 mm/s. When operating at a speed exceeding 90 mm/s, do not apply a radial load to the rack by providing a guide, etc.
*2 Do not apply a radial load to the rack by providing a guide, etc. as the rack may be damaged.

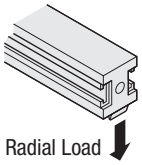

Dimensions (Unit: mm)

●LM2 B Type

◇Frame Size 60 mm High-Speed Type

Stroke [mm]	Product Name	L1	L2	Mass (Rack Mass Included) [kg]	Rack Mass [kg]
100	**LM2B500AZAC-1**	229.4	132	1.9	0.5
200	**LM2B500AZAC-2**	330.0		2.0	0.6
300	**LM2B500AZAC-3**	430.4		2.2	0.8
400	**LM2B500AZAC-4**	531.0		2.4	1.0
500	**LM2B500AZAC-5**	631.5		2.6	1.2
600	**LM2B500AZAC-6**	731.4		2.8	1.4
700	**LM2B500AZAC-7**	829.5		3.0	1.6
800	**LM2B500AZAC-8**	930.4		3.2	1.8

◇Frame Size 60 mm High-Speed Type with Electromagnetic Brake

Stroke [mm]	Product Name	L1	L2	Mass (Rack Mass Included) [kg]	Rack Mass [kg]
100	**LM2B500AZMC-1**	229.4	178	2.2	0.5
200	**LM2B500AZMC-2**	330.0		2.3	0.6
300	**LM2B500AZMC-3**	430.4		2.5	0.8
400	**LM2B500AZMC-4**	531.0		2.7	1.0
500	**LM2B500AZMC-5**	631.5		2.9	1.2
600	**LM2B500AZMC-6**	731.4		3.1	1.4
700	**LM2B500AZMC-7**	829.5		3.3	1.6
800	**LM2B500AZMC-8**	930.4		3.5	1.8

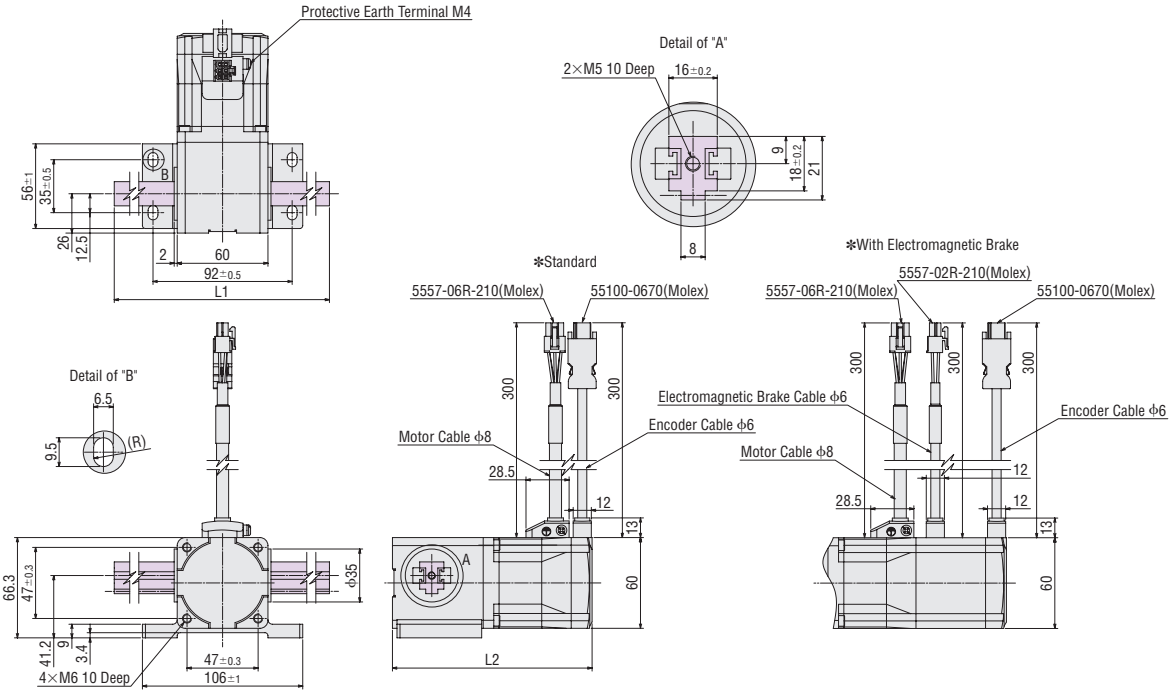

● The ▭ shaded areas are moving parts.

●LM2 F Type

◇Frame Size 60 mm High-Speed Type

Stroke [mm]	Product Name	L1	L2	Mass (Rack Mass Included) [kg]	Rack Mass [kg]
100	**LM2F500AZAC-1**	229.4	132	1.9	0.5
200	**LM2F500AZAC-2**	330.0		2.0	0.6
300	**LM2F500AZAC-3**	430.4		2.2	0.8
400	**LM2F500AZAC-4**	531.0		2.4	1.0
500	**LM2F500AZAC-5**	631.5		2.6	1.2
600	**LM2F500AZAC-6**	731.4		2.8	1.4
700	**LM2F500AZAC-7**	829.5		3.0	1.6
800	**LM2F500AZAC-8**	930.4		3.2	1.8

◇Frame Size 60 mm High-Speed Type with Electromagnetic Brake

Stroke [mm]	Product Name	L1	L2	Mass (Rack Mass Included) [kg]	Rack Mass [kg]
100	**LM2F500AZMC-1**	229.4	178	2.2	0.5
200	**LM2F500AZMC-2**	330.0		2.3	0.6
300	**LM2F500AZMC-3**	430.4		2.5	0.8
400	**LM2F500AZMC-4**	531.0		2.7	1.0
500	**LM2F500AZMC-5**	631.5		2.9	1.2
600	**LM2F500AZMC-6**	731.4		3.1	1.4
700	**LM2F500AZMC-7**	829.5		3.3	1.6
800	**LM2F500AZMC-8**	930.4		3.5	1.8

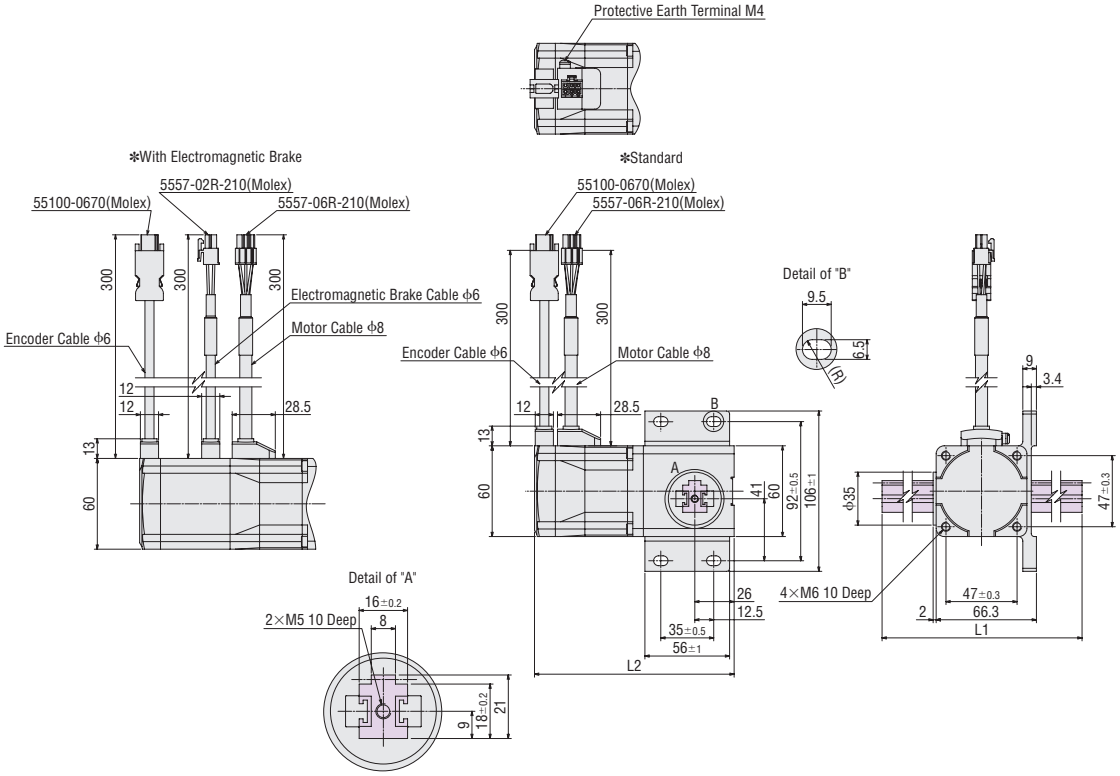

●LM2 B Type

◇Frame Size 60 mm High-Transportable-Mass Type

Stroke [mm]	Product Name	L1	L2	Mass (Rack Mass Included) [kg]	Rack Mass [kg]
100	**LM2B90AZAC-1**	229.4	170.5	2.1	0.5
200	**LM2B90AZAC-2**	330.0		2.2	0.6
300	**LM2B90AZAC-3**	430.4		2.4	0.8
400	**LM2B90AZAC-4**	531.0		2.6	1.0
500	**LM2B90AZAC-5**	631.5		2.8	1.2
600	**LM2B90AZAC-6**	731.4		3.0	1.4
700	**LM2B90AZAC-7**	829.5		3.2	1.6
800	**LM2B90AZAC-8**	930.4		3.4	1.8

◇Frame Size 60 mm High-Transportable-Mass Type with Electromagnetic Brake

Stroke [mm]	Product Name	L1	L2	Mass (Rack Mass Included) [kg]	Rack Mass [kg]
100	**LM2B90AZMC-1**	229.4	216.5	2.5	0.5
200	**LM2B90AZMC-2**	330.0		2.6	0.6
300	**LM2B90AZMC-3**	430.4		2.8	0.8
400	**LM2B90AZMC-4**	531.0		3.0	1.0
500	**LM2B90AZMC-5**	631.5		3.2	1.2
600	**LM2B90AZMC-6**	731.4		3.4	1.4
700	**LM2B90AZMC-7**	829.5		3.6	1.6
800	**LM2B90AZMC-8**	930.4		3.8	1.8

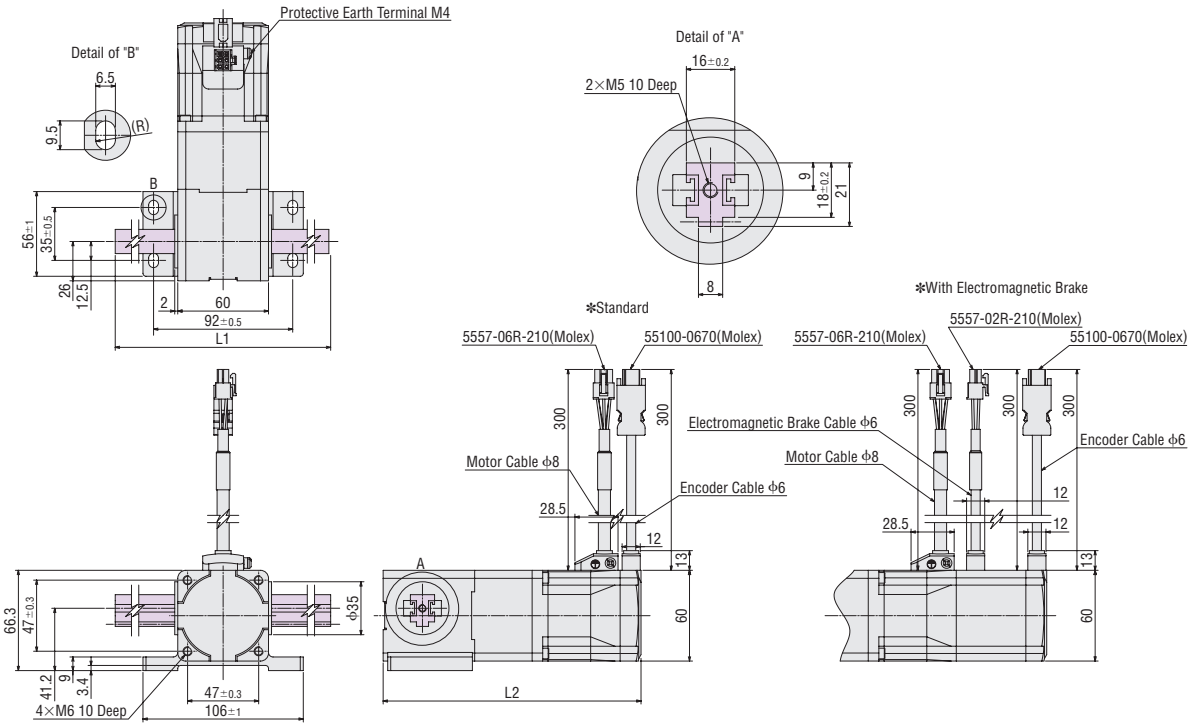

●LM2 F Type

◇Frame Size 60 mm High-Transportable-Mass Type

Stroke [mm]	Product Name	L1	L2	Mass (Rack Mass Included) [kg]	Rack Mass [kg]
100	**LM2F90AZAC-1**	229.4	170.5	2.1	0.5
200	**LM2F90AZAC-2**	330.0		2.2	0.6
300	**LM2F90AZAC-3**	430.4		2.4	0.8
400	**LM2F90AZAC-4**	531.0		2.6	1.0
500	**LM2F90AZAC-5**	631.5		2.8	1.2
600	**LM2F90AZAC-6**	731.4		3.0	1.4
700	**LM2F90AZAC-7**	829.5		3.2	1.6
800	**LM2F90AZAC-8**	930.4		3.4	1.8

◇Frame Size 60 mm High-Transportable-Mass Type with Electromagnetic Brake

Stroke [mm]	Product Name	L1	L2	Mass (Rack Mass Included) [kg]	Rack Mass [kg]
100	**LM2F90AZMC-1**	229.4	216.5	2.5	0.5
200	**LM2F90AZMC-2**	330.0		2.6	0.6
300	**LM2F90AZMC-3**	430.4		2.8	0.8
400	**LM2F90AZMC-4**	531.0		3.0	1.0
500	**LM2F90AZMC-5**	631.5		3.2	1.2
600	**LM2F90AZMC-6**	731.4		3.4	1.4
700	**LM2F90AZMC-7**	829.5		3.6	1.6
800	**LM2F90AZMC-8**	930.4		3.8	1.8

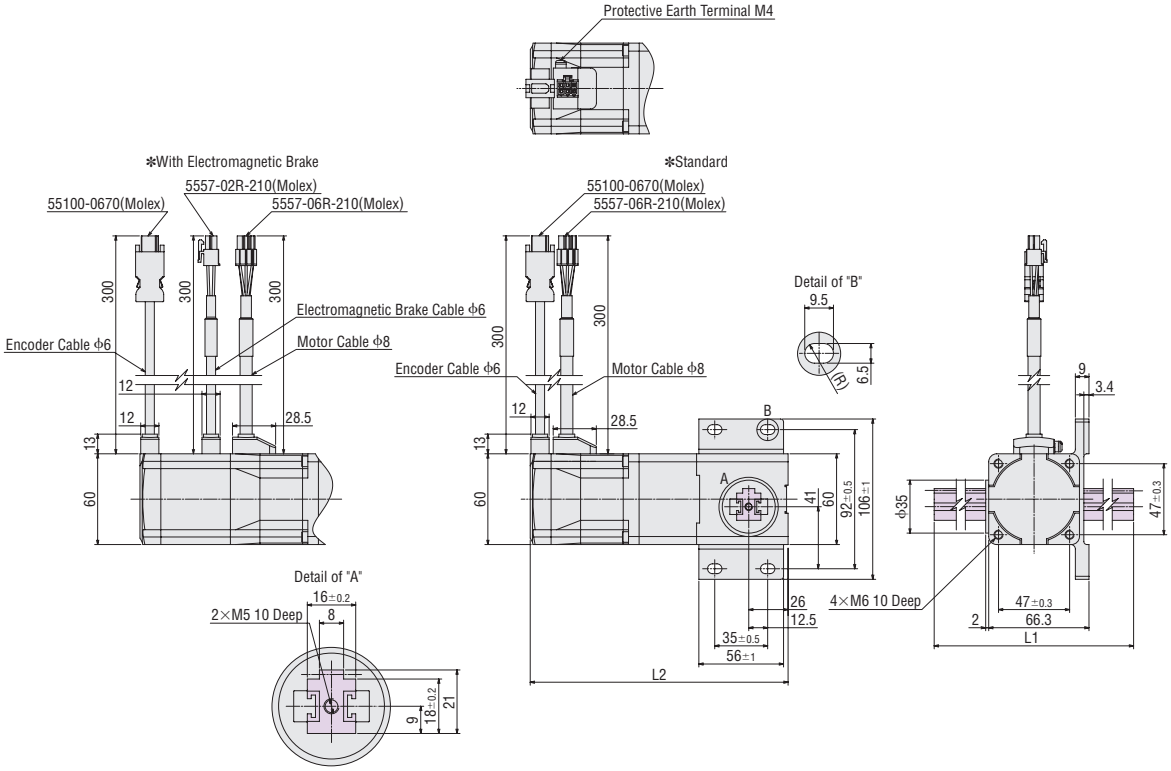

● The ▭ shaded areas are moving parts.

●LM4 B Type

◇Frame Size 80 mm

Stroke [mm]	Product Name	L1	L2	Mass (Rack Mass Included) [kg]		Rack Mass [kg]
				High-Speed Type	High-Transportable-Mass Type	
100	**LM4B□AZAC-1**	243.5	177.7	2.8	2.9	0.7
200	**LM4B□AZAC-2**	341.6		3.1	3.2	1.0
300	**LM4B□AZAC-3**	443.7		3.4	3.5	1.3
400	**LM4B□AZAC-4**	541.9		3.6	3.7	1.5
500	**LM4B□AZAC-5**	640.1		3.9	4.0	1.8
600	**LM4B□AZAC-6**	742.2		4.2	4.3	2.1
700	**LM4B□AZAC-7**	840.4		4.5	4.6	2.4
800	**LM4B□AZAC-8**	942.5		4.8	4.9	2.7
900	**LM4B□AZAC-9**	1040.7		5.1	5.2	3.0
1000	**LM4B□AZAC-10**	1142.8		5.4	5.5	3.3

● Either **40** (40 mm/s) or **500** (500 mm/s) indicating the maximum rack speed is entered where the box □ is located within the product name.

◇Frame Size 80 mm With Electromagnetic Brake

Stroke [mm]	Product Name	L1	L2	Mass (Rack Mass Included) [kg]		Rack Mass [kg]
				High-Speed Type	High-Transportable-Mass Type	
100	**LM4B□AZMC-1**	243.5	223.7	3.2	3.3	0.7
200	**LM4B□AZMC-2**	341.6		3.5	3.6	1.0
300	**LM4B□AZMC-3**	443.7		3.8	3.9	1.3
400	**LM4B□AZMC-4**	541.9		4.0	4.1	1.5
500	**LM4B□AZMC-5**	640.1		4.3	4.4	1.8
600	**LM4B□AZMC-6**	742.2		4.6	4.7	2.1
700	**LM4B□AZMC-7**	840.4		4.9	5.0	2.4
800	**LM4B□AZMC-8**	942.5		5.2	5.3	2.7
900	**LM4B□AZMC-9**	1040.7		5.5	5.6	3.0
1000	**LM4B□AZMC-10**	1142.8		5.8	5.9	3.3

● Either **40** (40 mm/s) or **500** (500 mm/s) indicating the maximum rack speed is entered where the box □ is located within the product name.

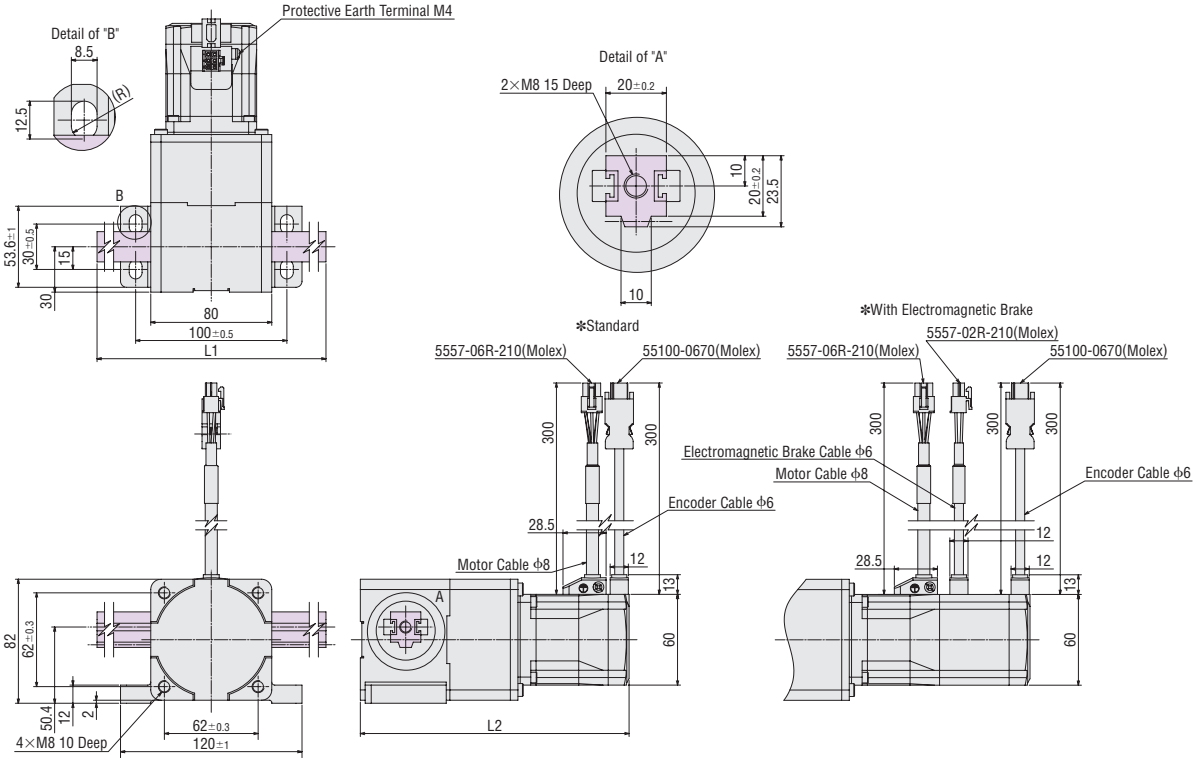

● The ▭ shaded areas are moving parts.

●LM4 F Type

◇Frame Size 80 mm

Stroke [mm]	Product Name	L1	L2	Mass (Rack Mass Included) [kg]		Rack Mass [kg]
				High-Speed Type	High-Transportable-Mass Type	
100	**LM4F□AZAC-1**	243.5	177.7	2.8	2.9	0.7
200	**LM4F□AZAC-2**	341.6		3.1	3.2	1.0
300	**LM4F□AZAC-3**	443.7		3.4	3.5	1.3
400	**LM4F□AZAC-4**	541.9		3.6	3.7	1.5
500	**LM4F□AZAC-5**	640.1		3.9	4.0	1.8
600	**LM4F□AZAC-6**	742.2		4.2	4.3	2.1
700	**LM4F□AZAC-7**	840.4		4.5	4.6	2.4
800	**LM4F□AZAC-8**	942.5		4.8	4.9	2.7
900	**LM4F□AZAC-9**	1040.7		5.1	5.2	3.0
1000	**LM4F□AZAC-10**	1142.8		5.4	5.5	3.3

● Either **40** (40 mm/s) or **500** (500 mm/s) indicating the maximum rack speed is entered where the box □ is located within the product name.

◇Frame Size 80 mm With Electromagnetic Brake

Stroke [mm]	Product Name	L1	L2	Mass (Rack Mass Included) [kg]		Rack Mass [kg]
				High-Speed Type	High-Transportable-Mass Type	
100	**LM4F□AZMC-1**	243.5	223.7	3.2	3.3	0.7
200	**LM4F□AZMC-2**	341.6		3.5	3.6	1.0
300	**LM4F□AZMC-3**	443.7		3.8	3.9	1.3
400	**LM4F□AZMC-4**	541.9		4.0	4.1	1.5
500	**LM4F□AZMC-5**	640.1		4.3	4.4	1.8
600	**LM4F□AZMC-6**	742.2		4.6	4.7	2.1
700	**LM4F□AZMC-7**	840.4		4.9	5.0	2.4
800	**LM4F□AZMC-8**	942.5		5.2	5.3	2.7
900	**LM4F□AZMC-9**	1040.7		5.5	5.6	3.0
1000	**LM4F□AZMC-10**	1142.8		5.8	5.9	3.3

● Either **40** (40 mm/s) or **500** (500 mm/s) indicating the maximum rack speed is entered where the box □ is located within the product name.

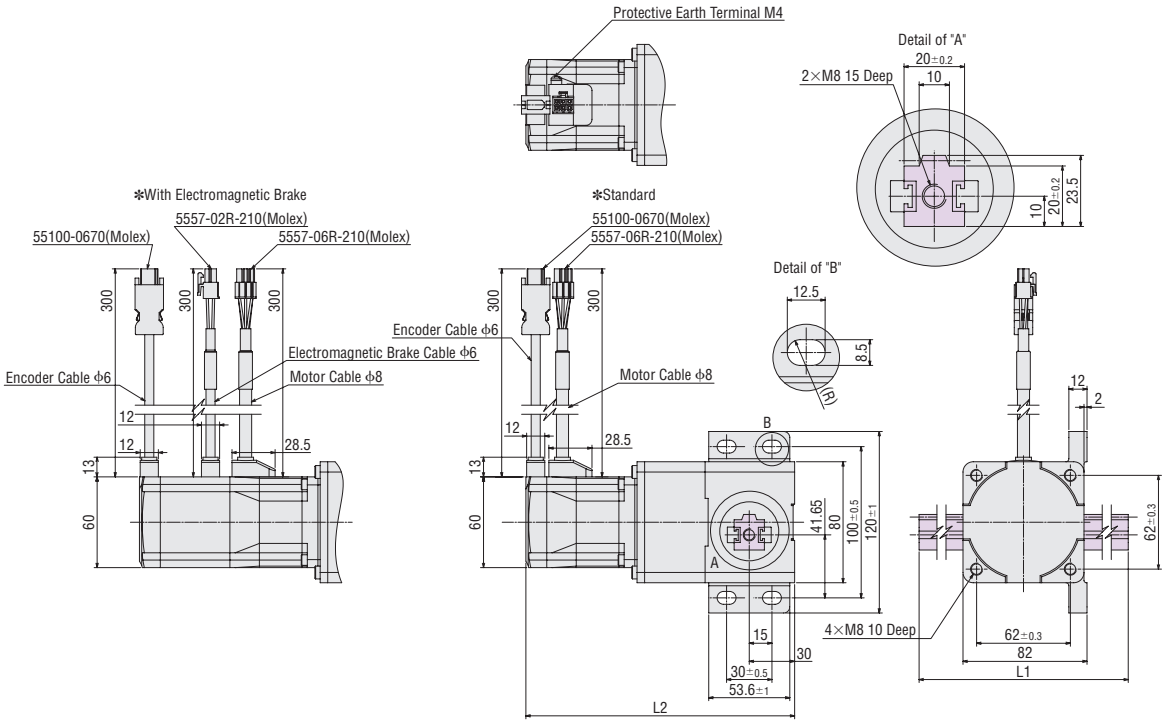

● The ▭ shaded areas are moving parts.

Peripheral Equipment

Photomicrosensor Sets

A photomicrosensor set, which consists of a photomicrosensor (with flexible cable), sensor mounting bracket, shielding plate and installation screw, is provided to facilitate easy return-to-home operation.
All parts needed for return to home operation are included in the set, so you will spend less time designing, fabricating or procuring parts in connection with sensor installation.

Features

Compact

This is a compact sensor that takes into consideration the installation space. It is easy to detect the rack position.

Two Output Signals are Available

By installing a sensor on both sides of the rack, it is possible to detect two signals at both moving ends or the signals at the moving end and the intermediate stop position, separately.

Product Line

Product Name	Applicable Product
PARP-PS2B	**LM2**
PARP-PS4B	**LM4**

The following items are included with each product.
Photomicrosensors* (2 pieces), Shielding Plates (4 pieces), Sensor Mounting Bracket (1 piece), Photomicrosensor Installation Screws (4 pieces), Operating Manual
*With flexible cable (3 m)

Installation Example

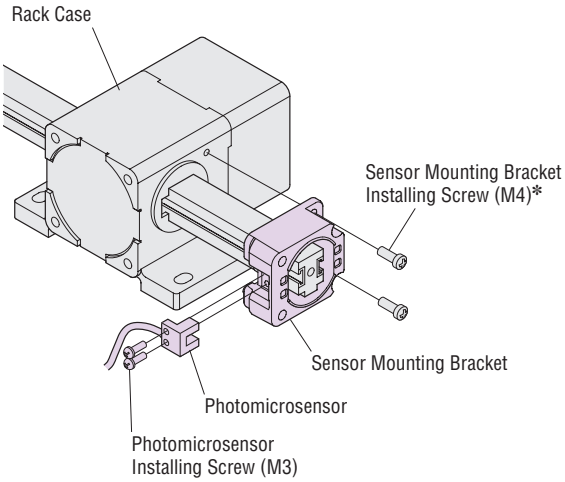

*Use the screws included with the rack case.

Specifications

Product Name	EE-SX951-R (OMRON)
Power Supply Voltage	5 - 24 VDC±10 %, Ripple (Peak to Peak) 10 % max.
Consumption Current	15 mA or less
Control Output	NPN Open-Collector Output, 5 - 24 VDC, 50 mA or less Residual Voltage: 0.7 VDC or less (At load current of 50 mA) 0.4 VDC or less (At load current of 5 mA)
Indicator LED	Detection Indication (Red)
Logic	Normally Open/Normally Closed (Possible to switch by connection)

Dimensions (Unit: mm)

PARP-PS2B

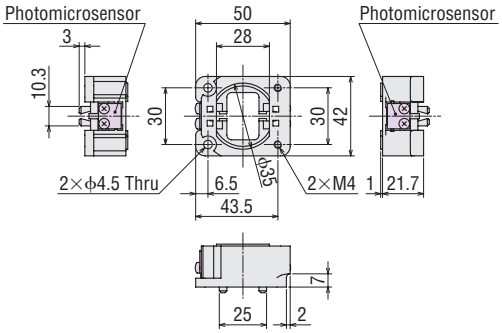

PARB-PS4B

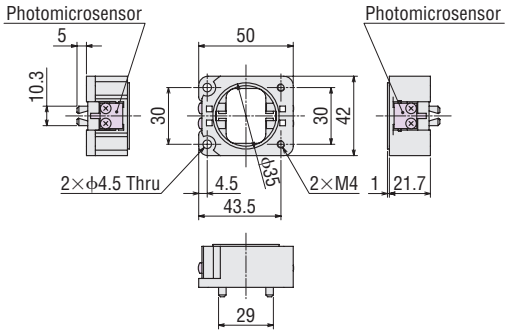

The dimensions with photomicrosensor set attached to L Series are available.
Refer to the Oriental Motor website.

Rack Cover (For Photomicrosensor)

It is a simple cover that protects the rack from impact and particles adhesion.
It also prevents grease from adhering to human body, equipment and so on. Use it together with photomicrosensor set (sold separately).

Product Name	Applicable Product	Applicable Stroke [mm]
2LSC-P02	**LM2**	100, 200
2LSC-P04		300, 400
4LSC-P02	**LM4**	100, 200
4LSC-P04		300, 400

Products available in the **AZ** Series

Orientalmotor

These products are manufactured at plants certified with the international standards **ISO 9001** (for quality assurance) and **ISO 14001** for systems of environmental management).

Specifications are subject to change without notice. Published in January 2024.

ORIENTAL MOTOR (EUROPA) GmbH

European Headquarters
Schiessstraße 44
40549 Düsseldorf, Germany
Tel: 0211 5206700 Fax: 0211 52067099

Spanish Office
C/Caléndula 93 - Ed. E - Miniparc III
28109 El Soto de La Moraleja,
Alcobendas (Madrid), Spain
Tel: +34 918 266 565

ORIENTAL MOTOR (UK) LTD.

UK Headquarters
Unit 5, Faraday Office Park,
Rankine Road, Basingstoke,
Hampshire RG24 8AH, U.K.
Tel: +44 1256 347090 Fax: +44 1256 347099

ORIENTAL MOTOR SWITZERLAND AG

Switzerland Headquarters
Badenerstrasse 13
5200 Brugg AG, Switzerland
Tel: +41 56 560 50 45 Fax: +41 56 560 50 47

ORIENTAL MOTOR ITALIA s.r.l.

Italy Headquarters
Via XXV Aprile 5
20016 Pero (MI), Italy
Tel: +39 2 93906346 Fax: +39 2 93906348

ORIENTAL MOTOR (FRANCE) SARL

France Headquarters
56, Rue des Hautes Pâtures
92000 Nanterre, France
Tel: +33 1 47 86 97 50 Fax: +33 1 47 82 45 16

Customer Service Center
(Support in German & English)

00800 22 55 66 22*

Mon-Thu: 08:00 - 16:30 CET
Friday: 08:00 - 15:00 CET
*Free Call Europe

info@orientalmotor.de

WWW.ORIENTALMOTOR.EU

EN | DE | UK | IT | FR | ES

UK/012024/VERS03

Printed in Germany